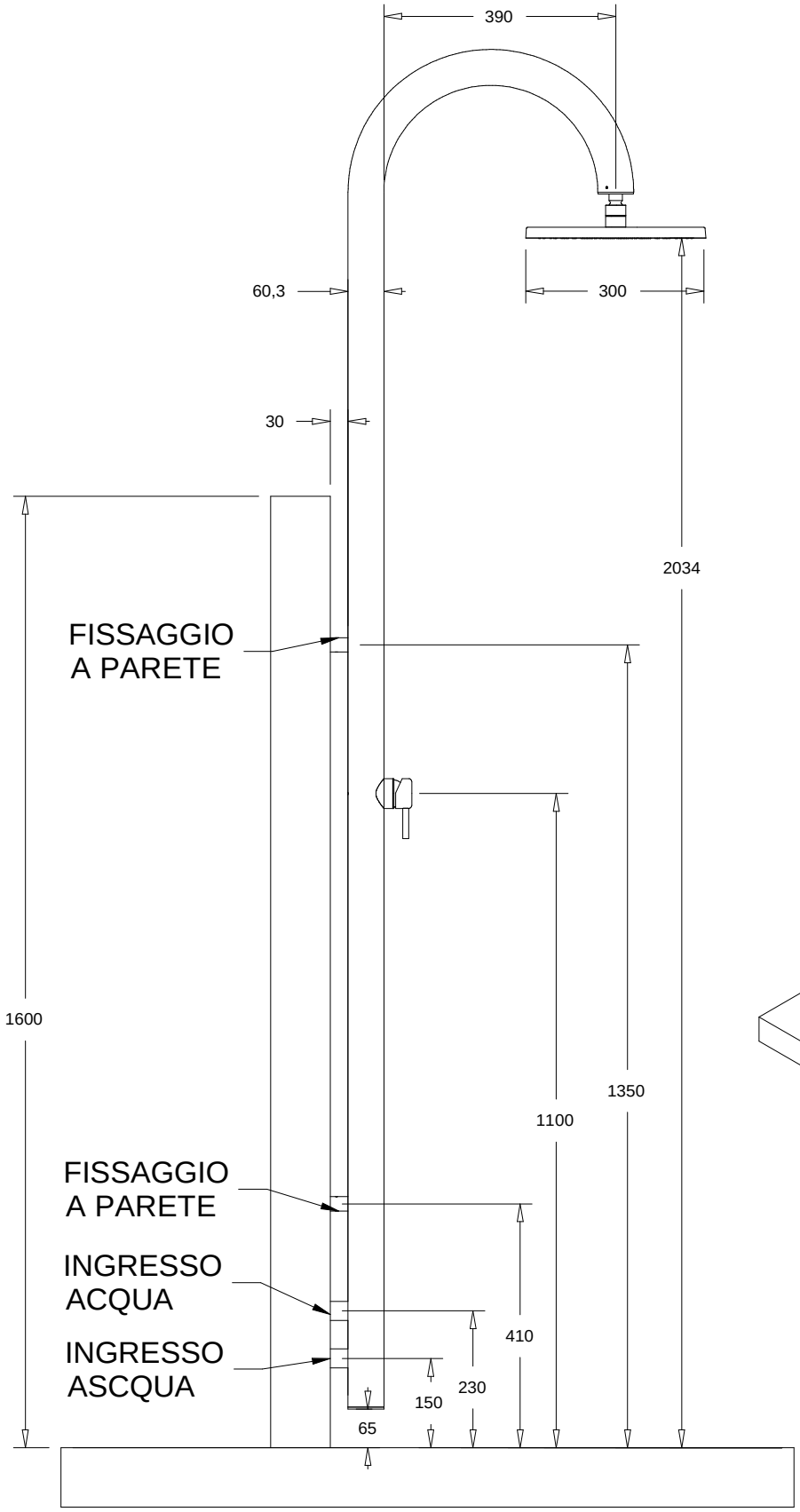

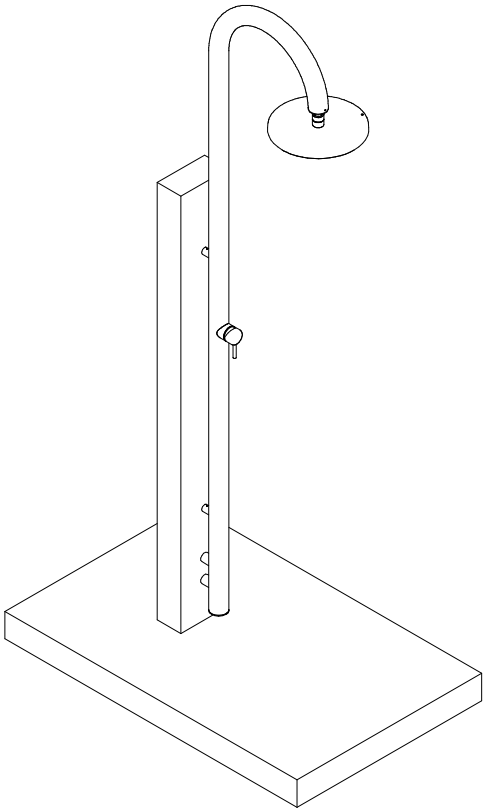

© 2016 WWW.MJFABER.COM